Email:sfengda@shenfengda.com

SFENGDA

SFD-FB 25489

254mm DC FAN

CE RS

General Specifications

- Material ---------- Frame:Die-cast Aluminun
  Impeller:Plastics (Flammability:UL94V-0)
- Lead Wire -------- + Red - Black (Sensor) Yellow (Control) Brown
- Life time ----------50000 Hours Ball bearing
- Storage Temperatur--- -30℃ ~ +70℃（Non-comdensing）
- Bearing Type----- Ball Bearings Sleeve
- Speed Range----- ±10%
- Part Numbering System

SFD-FB25489L24- B R 1

- 1: Waterproof level:0=no,1=IP55,2=IP68
- R: Sensor: 0=no,R=RD sensor ,F=FG sensor ,P=PWM sensor ,T=Temperature sensor
- B: Bearing:S=sleeve bearing,B=ball bearing,Y=superflo bearing,L=long life bearing

254 X 89mm (Mass: 2400g)

Model No.	Rated Voltage	Operating Voltage	Rated Current	Rated Input	Speed	Maximum Air Flow		Max.Static Pressure		Noise
	VDC	VDC	AMP	Watt	R.P.M	M3/min	CFM	Pa	IN H2O	dB-A
SFD-FB25489L24	24	7.2-13.8	1.55	37.2	1700	16.12	575.8	162.3	0.69	43.0
SFD-FB25489M24			2.35	56.4	2200	20.95	752.4	213.6	0.86	56.0
SFD-FB25489H24			3.65	87.6	2800	26.25	910.6	273.1	1.08	69.0
SFD-FB25489L48	48	14.5~27.5	0.85	40.8	1700	16.12	575.8	162.3	0.69	43.0
SFD-FB25489M48			1.25	60.0	2200	20.95	752.4	213.6	0.86	56.0
SFD-FB25489H48			2.05	98.4	2800	26.25	910.6	273.1	1.08	69.0

Dimensions(unit:mm\inch)

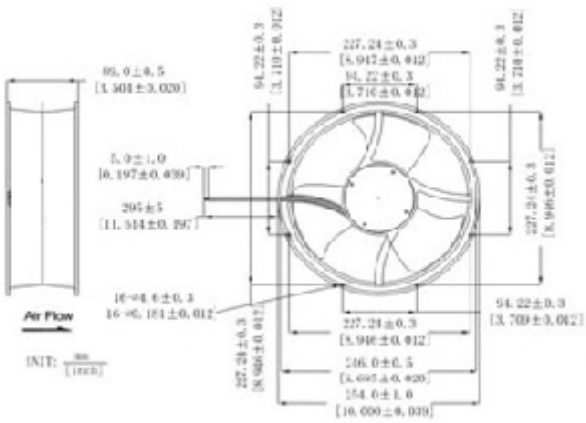
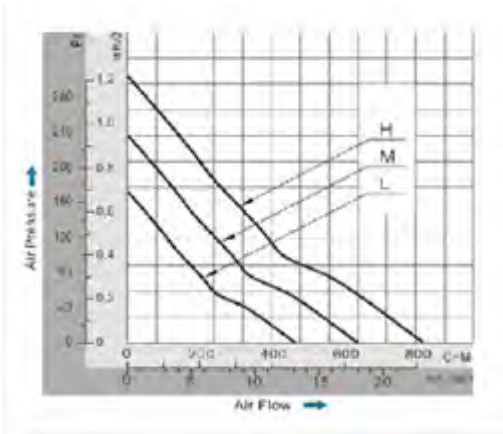
Air Flow-Static Pressure Characteristics